RoHS

REV.	DESCRIPTION	DATE
A	ISSUE	Sep/18/2008
A1	Change pin plating.	Dec/05/2013

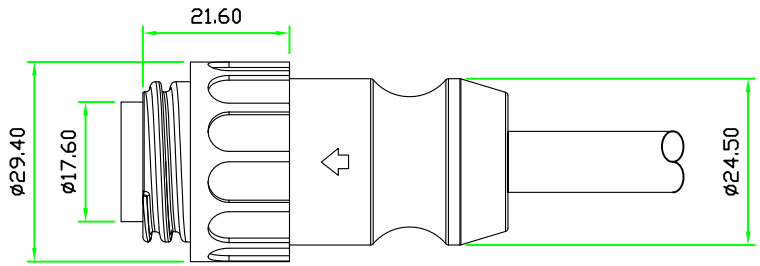

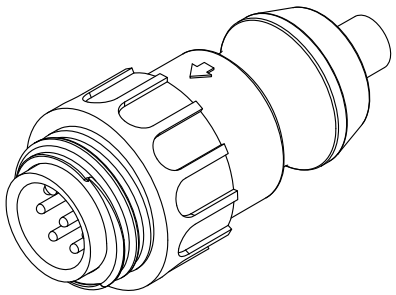

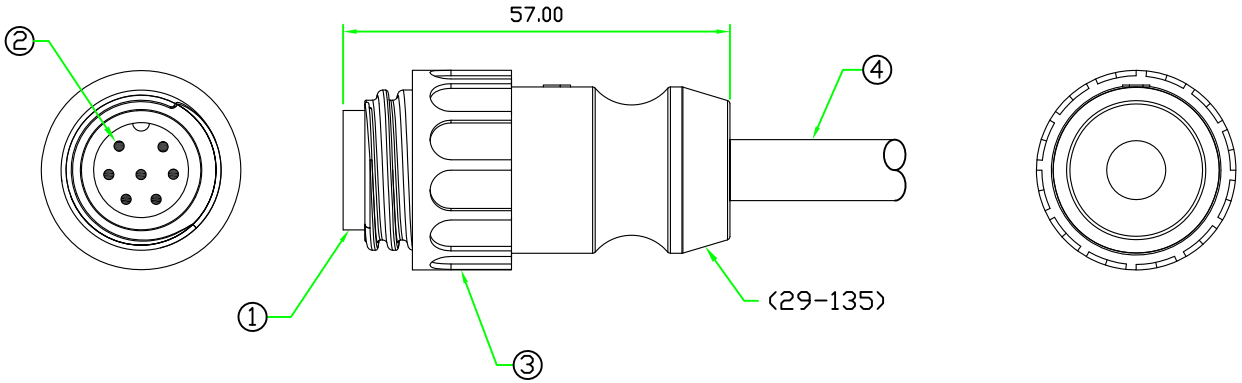

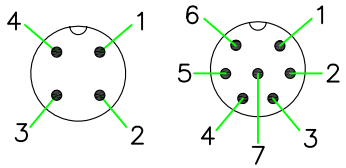

Pin Assignment Front View
(前視圖)

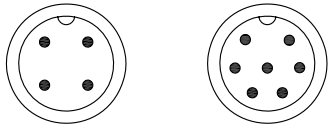

CPP-P104SN CPP-P107SN

No.	PART NAME	DESCRIPTION	COLOR	Q'TY	REMARKS
4	CABLE			1	
3	SCREW NUT	NYLON.	BLACK	1	P-SN-M (28-135)
2	CONTACT	BRASS, MALE PIN, 6u" GOLD PLATED. A1		N	C16-1-M-C-PS
1	CONNECTOR	NYLON+GF.	BLACK	1	CPP-C1xxM-S (27-135)

HOLIN® HTP ASIA TECHNOLOGY CO., LTD.
禾 凌 科 技 股 份 有 限 公 司

UNIT: mm
SCALE 1:1
UNLESS OTHERWISE SPECIFIED TOLERANCES:
x ±0.25 xx ± 0.1
xxx ± 0.05 ANGLE ± 1°
REV. A1
SHEET 1/1

TITLE CIRCULAR P SIZE MALE SCREW TYPE MOLDED CABLE
P/N: CPP-P1xxSN
DWG.NO: CPP-P1xxSN
DR. JACK
CH. MICHAEL
AP.