PROPRIETARY AND CONFIDENTIAL:THE INFORMATION CONTAINED IN THIS DRAWING IS THE SOLE PROPERTY OF HTP ASIA TECHNOLOGY CO., LTD. . ANY REPRODUCTION IN PART OR AS A WHOLE WITHOUT THE WRITTEN PERMISSION OF HTP ASIA TECHNOLOGY CO., LTD. IS PROHIBITED.

RoHS

REV.	DESCRIPTION	DATE
A	ISSUE	Nov/19/2024

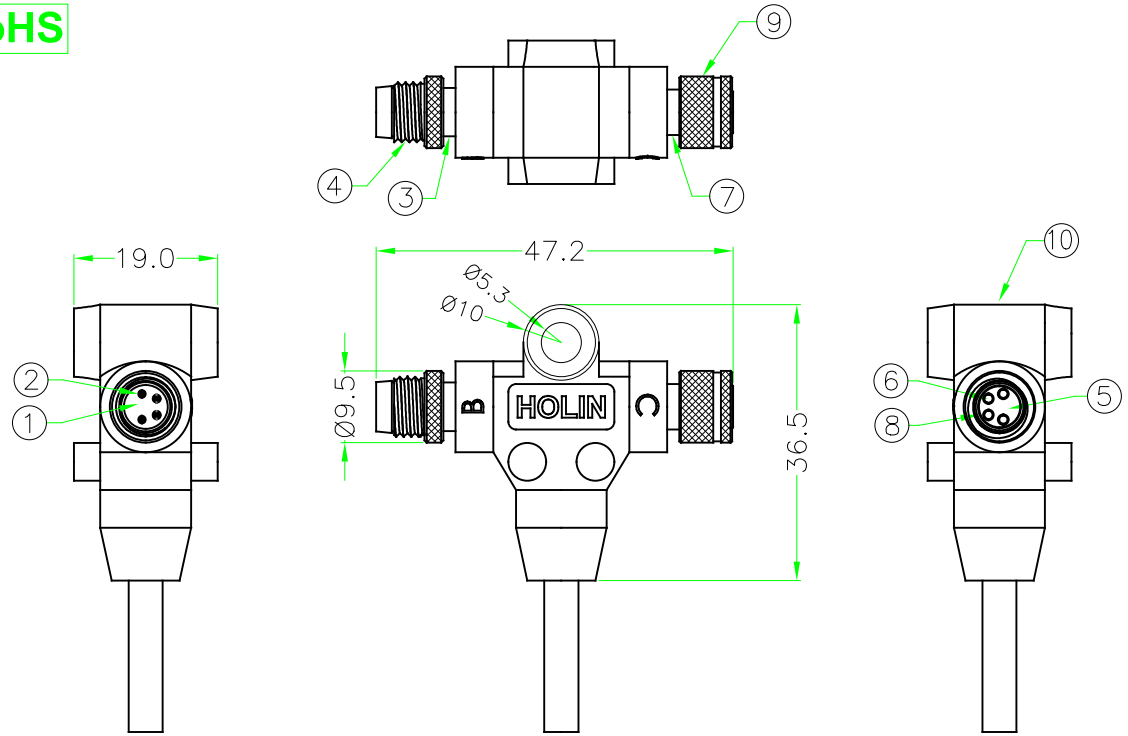

NOTES:
1. ELECTRICAL CHARACTERISTICS:
   CURRENT RATING: 3A
   VOLTAGE RATING; 30V D.C or A.C
   TEMPERATURE RANGE: -25°C TO +85°C
   DIELECTRIC WITHSTANDING VOLTAGE:
   500V AC FOR ONE MINUTE
2. HOW TO ORDER: A08T-SCMF0xx
   - 22 - 2 PINS
   - 33 - 3 PINS
   - 44 - 4 PINS
   - CONNECTOR GENDER

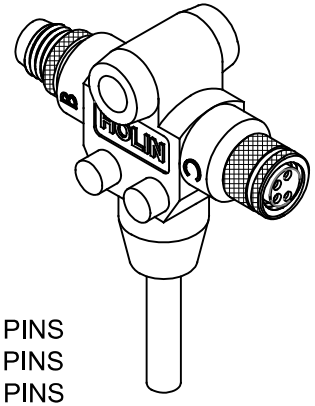

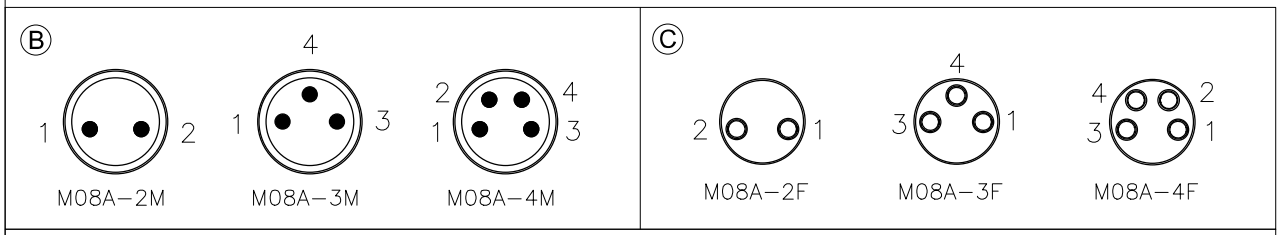

PIN ASSIGNMENT FRONT VIEW（前視圖）

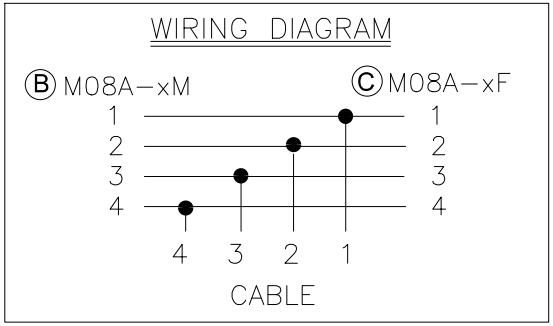

No.	PART NAME	DESCRIPTION	COLOR	Q'TY	REMARKS
10	OVERMOLD	PU.	BLACK	1	
9	RING NUT	Brass, Nickel Plated.		1	
8	O-RING	Viton.	BLACK	1	
7	METAL SHELL	Brass, Nickel Plated.		1	
6	CONTACT	Brass , 6 u" Gold Plated. Female Contact.		N	
5	CONNECTOR	M8 A-Coding Female Connector Insert. Nylon+GF.	BLACK	1	
4	RING NUT	Brass, Nickel Plated.		1	
3	METAL SHELL	Brass, Nickel Plated.		1	
2	CONTACT	Brass , 6 u" Gold Plated. Male Contact.		N	
1	CONNECTOR	M8 A-Coding Male Connector Insert. Nylon+GF.	BLACK	1	

※Cable specification and length can be customized.

HOLIN® HTP ASIA TECHNOLOGY CO., LTD.
禾 凌 科 技 股 份 有 限 公 司

UNIT: mm	TITLE : M8 A-Coding Male to Female Shielded Molded Cable		
SCALE 1:1			
UNLESS OTHERWISE SPECIFIED TOLERANCES: XX. ±1.0 .X ±1.0 .XX ±0.5 .XXX ±0.25 ANGLE ± 1°	P/N: A08T-SCMF0xx	DR. SIBYL	
		CH. JAMES	
REV. A / SHEET 1/1	DWG.NO: A08T-SCMF0xx	AP.	

-版權所有,翻版必究-